# SUB-POISSON LIGHT GENERATION BY SELECTIVE DELETION FROM CASCADED ATOMIC EMISSIONS

B.E.A. SALEH [1]
*Department of Electrical and Computer Engineering, University of Wisconsin, Madison, WI 53706, USA*

and

M.C. TEICH
*Columbia Radiation Laboratory, Department of Electrical Engineering, Columbia University, New York, NY 10027, USA*

Received 2 October 1984

We discuss the generation of stationary sub-Poisson light by selective deletion from cascaded atomic emissions. As a particular example we show that, under appropriate conditions, the green/violet cascade from an atomic beam of Ca can be made to produce low-flux violet light that is weakly sub-Poisson. In principle, the technique can be applied to other two-photon processes such as positron annihilation radiation.

In recent years, many optical processes have been proposed for generating nonclassical (e.g., antibunched and/or sub-Poisson) light. Almost all of the proposed techniques (including degenerate parametric amplification, multiphoton emission, and resonance fluorescence) involve the interaction of light with a nonlinear medium [1]. Viewed in an elementary way, these multiphoton or nonlinear optical processes operate on pairs (or clusters) of photons from the (Poisson) beam of exciting light, thereby regularizing the photon point process. In a few cases, nonlinear optics has been used to generate nonclassical light in the laboratory. Resonance fluorescence from Na vapor was shown by Kimble et al. [2] to produce antibunched light and by Short and Mandel [3] to generate sub-Poisson individual emissions in a selected short time interval. Nonclassical light can also be generated by linear (one-photon) interactions; we have recently used a space-charge-limited electron beam to generate stationary sub-Poisson light (via single-photon spontaneous emissions) in Hg vapor [4].

In most of the nonlinear processes, the pairs or clusters of photons interact with the nonlinear medium at random times and positions. Knowledge of the photon arrival times and positions could be useful in regulating the photons but this generally requires their annihilation. In this communication we discuss a method of generating sub-Poisson light that uses one member of a correlated pair of photons to gate the passage of the other member. In this way one of the pair survives to contribute to the light. For concreteness, we consider an experiment in which a collection of excited atoms undergoes spontaneous cascaded emissions. Explicitly, we have in mind the $4p^2\ {}^1S_0 \rightarrow 4s4p\ {}^1P_1 \rightarrow 4s^2\ {}^1S_0$ green/violet cascade in $^{40}Ca$. This system was recently used by Aspect et al. [5–7] in an interesting polarization correlation experiment that demonstrated a strong violation of the generalized Bell's inequalities.

A block diagram illustrating the idea is presented in fig. 1. A beam of $^{40}Ca$ atoms is selectively excited to

[1] Also with Columbia Radiation Laboratory, Department of Electrical Engineering, New York, New York 10027, USA.

0 030-4018/85/$03.30 © Elsevier Science Publishers B.V. (North-Holland Physics Publishing Division)

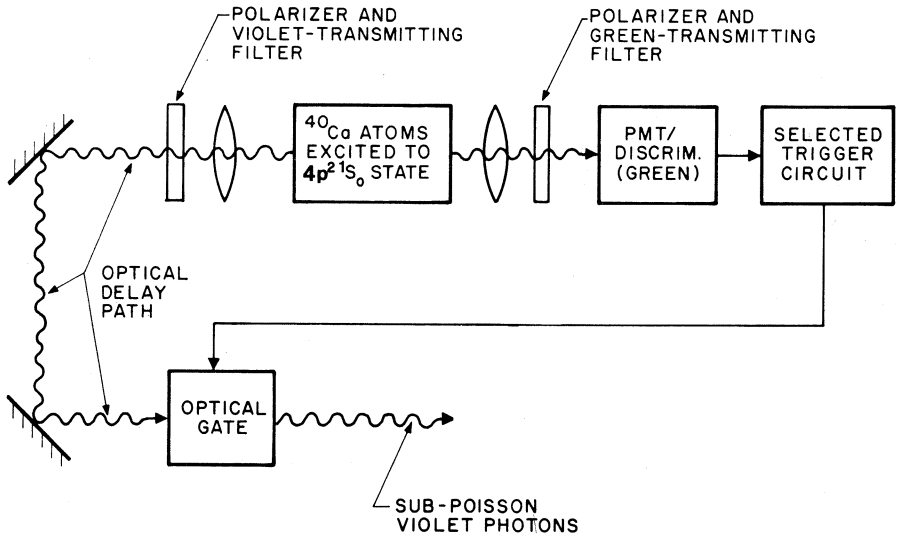


Fig. 1. Block diagram of sub-Poisson light generation using cascaded emissions from $^{40}$Ca atoms.

the $4p^2\ ^1S_0$ state by means of optical pumping (this may be accomplished, for example, by two-photon excitation using a krypton ion laser and a dye laser [5]). The atom decays by the spontaneous emission of a green photon (at a wavelength of 551.3 nm) and a violet photon (at 422.7 nm). The two photons are correlated in polarization. The green fluorescence light is collected by a lens and passed through a polarizer and green-transmitting interference filter to a photomultiplier tube (PMT)/discriminator. The green photoelectron events in turn feed a digital electronic trigger circuit that produces brief pulses (≈10 ns) in accordance with a rule for selection to be discussed below. The violet fluorescence light is collected from the other side of the source. It is fed through a polarizer and violet-transmitting interference filter, into an optical delay path, and then through an optical gate that is opened for a period of 10 ns each time a pulse arrives from the selected trigger circuit. The optical delay path is adjusted so that the electrical trigger pulse (arising from the registration of a green photon) and its companion violet photon arrive at the optical gate simultaneously. The optical gate can be an acousto-optic modulator [7], though it may be difficult to obtain a high-efficiency device that operates at the speed required by the configuration of fig. 1. The electrical trigger pulse also gates a violet PMT (not shown) for reasons that will become apparent.

Several representative sample functions of the photon events are presented in fig. 2. A simple picture of this kind assumes that the photon occurrences are sufficiently sparse so that their wavepackets do not overlap. This is equivalent to assuming that the degeneracy parameter $\delta = \mu\tau_p$ is low, which is the condition under which the proposed experiments must be operated. The quantity $\mu$ represents the photon rate and $\tau_p$ is the emission lifetime. The emission of the green photons from suitably excited Ca atoms may be represented as a Poisson point process [designated "green process" in row (a)]. For an experimental system using such an atomic beam, Aspect et al. [5] observed a cascade rate

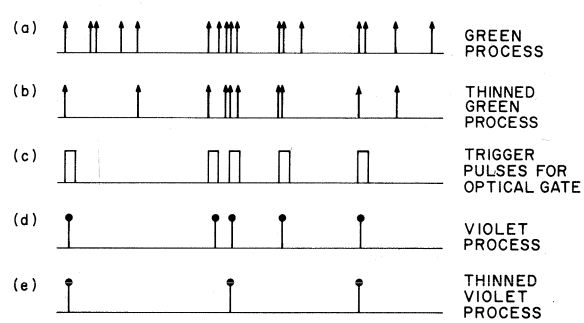


Fig. 2. Sample functions of the green and violet photon events. The thinned violet process represents a low-flux source of weakly sub-Poisson light.

$\mu_a \approx 4 \times 10^7\ s^{-1}$. Some fraction of the green photons produces unitary events at the output of the green PMT [designated "thinned green process" in row (b)]. The efficiency of Aspect's green collection/detection system is $\eta_g \approx 1.5 \times 10^{-3}$ so that the rate of the thinned green process will be $\mu_b = \eta_g \mu_a \approx 6 \times 10^4\ s^{-1}$. Clearly a Bernoulli-deleted photon point process remains Poisson but with a rate that is reduced [8,9].

The thinned green events are then used to produce 10-ns trigger pulses in accordance with a prespecified rule designed to render the trigger process sub-Poisson. As an example, a trigger pulse may be produced upon the registration of every $r$th green photon [this is illustrated for $r = 2$ in row (c), designated "trigger pulses for optical gate"]. It is well known from renewal point-process theory that the selective deletion of every $r$th event from a Poisson process leads to a counting process that becomes increasingly sub-Poisson as $r$ increases, provided that the counting time $T$ is sufficiently long (see eq. (A24) of ref. [10]). This is denoted as the gamma-$r$ counting process [10]. Other mechanisms, such as dead time, can alternatively be used to make the trigger pulses sub-Poisson (see eq. (A31) of ref. [10]). The trick is that for each green photon, and therefore for each trigger pulse, there is a probability that a violet companion photon is following closely behind (roughly within the intermediate-state lifetime $\tau_p \approx 5$ ns). The optical gate permits the violet photons to pass only during the times when it is open, and those times form a sub-Poisson counting process. Assuming for the moment that no violet photons are lost, row (d) illustrates the "violet process" which, in our example, is clearly also described by the gamma-$r$ counting process. Of course, not all of the violet photons survive so that what actually passes through the optical gate [designated "thinned violet process" in row (e)] is a randomly deleted version of the gamma-$r$ photon-counting process with rate $\mu_e = \eta_v \eta_g \mu_a / r$. It is well known that any randomly deleted sub-Poisson photon point process remains sub-Poisson, but moves toward the Poisson barrier [8,9].

The Fano factor $F_m(T)$ (ratio of the count variance to the count mean) for a Bernoulli-deleted gamma-$r$ photon-counting process is easily shown to be

$$F_m(T) = 1 - \eta_v(1 - 1/r), \tag{1}$$

when the counting time $T \gg \tau_p$. For an experimental configuration similar to that of Aspect [5], we can estimate $\eta_v \approx 2 \times 10^{-3}$ [this is comprised of the overall efficiency of the violet light collection optics ($\approx$0.05), the transmission of the violet interference filter ($\approx$0.3), and the efficiency of the optical gate ($\eta_g \approx 0.1$)]. Assuming $r = 2$, we obtain a numerical value for the photon Fano factor $F_m(T) \approx 1 - 10^{-3}$. Folding in the violet-PMT quantum efficiency ($\eta_p \approx 0.1$), we can estimate a photoelectron count rate $\mu_i \approx 6\ s^{-1}$ and a photoelectron Fano factor $F_n(T) \approx 1 - 10^{-4}$. This is small but measurable.

The deleterious effects of background, dark current, and accidental coincidences can be minimized by gating the violet PMT simultaneously with the optical gate. A similar PMT-gating technique was recently used by Aspect and Grangier to measure conditional correlations [11]. For $r = 2$, the gate opens for a 10 ns time interval at a rate $\mu_c \approx 3 \times 10^4\ s^{-1}$. Thus the duty cycle is $\approx 3 \times 10^{-4}$. If we make the reasonable assumption that the background, dark current, and accidental coincidences have a combined rate $\mu_h \approx 300\ s^{-1}$, the effective background rate with gating turns out to be $\approx$0.1 events/s which is negligible.

There are a number of pitfalls that must be assiduously avoided in attempts to generate sub-Poisson light by means of a scheme such as this. Random deletion and Poisson additive background events are constant problems that dilute (but do not destroy) the sub-Poisson nature of any light source [8,9]. These effects can be minimized by gating the PMT. The degeneracy parameter of *all* photon processes must be maintained small in comparison with unity so that interference does not destroy the correlation between the photons required for the technique to work (in the example of Ca atoms this condition was obeyed since $\delta_{max} = \mu_a \tau_p = 0.2 < 1$). It is apparent from this condition that the photon flux that can be generated by such a source will be severely limited (unlike the situation in which the excitations themselves are made sub-Poisson [10]). The trigger window should be taken as large as possible to maximize the capture of violet photons (we have assumed that they are all captured) but not so large as to interfere with the operation of the rule for selection or to admit too many dark events, background counts, and/or accidental coincidences.

We have also examined the situation in which the optical gate is kept *open* except when triggered closed by the arrival of a thinned green event. This results in

a Bernoulli-deleted gamma-2-plus-Poisson process, which provides less sub-Poisson behavior than the scheme discussed above. Though we have dwelt on cascaded atomic photon emissions from $^{40}Ca$, it is clear that this technique can be applied to different kinds of correlated two-photon emissions, such as positron annihilation radiation or polarization correlations in the framework of an Einstein–Podolsky–Rosen experiment [12].

It is a pleasure to thank A. Aspect for valuable comments. This work was supported by the Joint Services Electronics Program (U.S. Army, U.S. Navy, and U.S. Air Force) under contract DAAG29-82-K-0080 and by the National Science Foundation under grant ECS-82-19636.

## References

[1] A number of review papers on this topic have recently appeared. For example see
R. Loudon, Rep. Prog. Phys. 43 (1980) 913;
H. Paul, Rev. Mod. Phys. 54 (1982) 1061.
See also J. Peřina, Coherence of light, 2nd Ed. (Reidel, Dordrecht, 1984);
J. Peřina, Quantum statistics of linear and nonlinear optical phenomena (Reidel, Dordrecht, 1984).
[2] H.J. Kimble, M. Dagenais and L. Mandel, Phys. Rev. Lett. 39 (1977) 691.
[3] R. Short and L. Mandel, Phys. Rev. Lett. 51 (1983) 384.
[4] M.C. Teich, B.E.A. Saleh and D. Stoler, Optics Comm. 46 (1983) 244.
M.C. Teich and B.E.A. Saleh, J. Opt. Soc. Am., submitted for publication.
[5] A. Aspect, P. Grangier and G. Roger, Phys. Rev. Lett. 47 (1981) 460.
[6] A. Aspect, P. Grangier and G. Roger, Phys. Rev. Lett. 49 (1982) 91.
[7] A. Aspect, J. Dalibart and G. Roger, Phys. Rev. Lett. 49 (1982) 1804.
[8] M.C. Teich and B.E.A. Saleh, Optics Lett. 7 (1982) 365.
[9] J. Peřina, B.E.A. Saleh and M.C. Teich, Optics Comm. 48 (1983) 212.
[10] M.C. Teich, B.E.A. Saleh and J. Peřina, J. Opt. Soc. Am. B1 (1984) 366.
[11] A. Aspect and P. Grangier, personal communication.
[12] A. Einstein, B. Podolsky and N. Rosen, Phys. Rev. 47 (1935) 777.