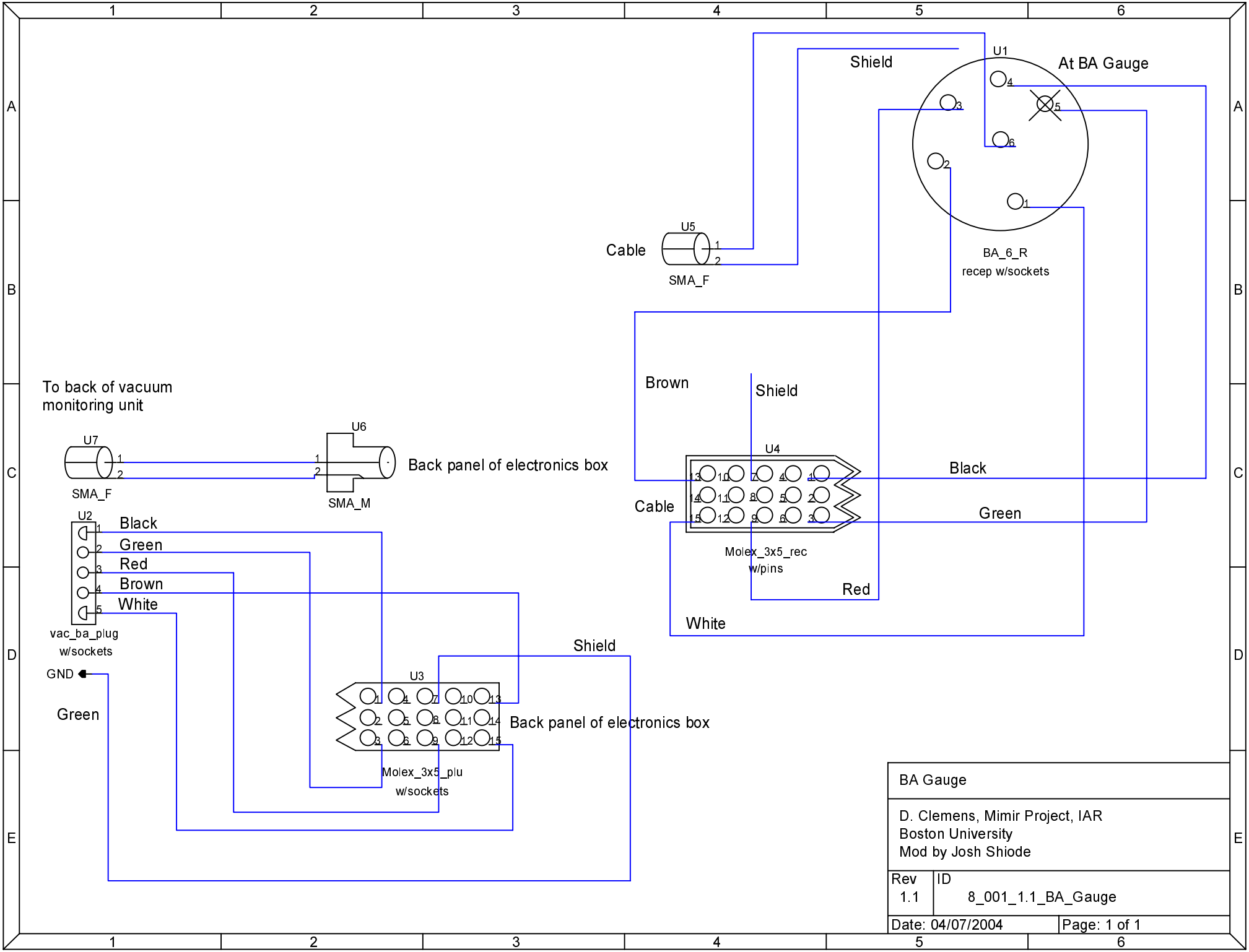
U1
At BA Gauge
Shield
BA_6_R
recep w/sockets
U5
Cable
SMA_F
Brown
Shield
U4
Black
Cable
Green
Molex_3x5_rec
w/pins
Red
White
To back of vacuum
monitoring unit
U7
SMA_F
U6
SMA_M
Back panel of electronics box
U2
Black
Green
Red
Brown
White
vac_ba_plug
w/sockets
GND
Green
Shield
U3
Back panel of electronics box
Molex_3x5_plu
w/sockets
BA Gauge
D. Clemens, Mimir Project, IAR
Boston University
Mod by Josh Shiode
Rev
1.1
ID
8_001_1.1_BA_Gauge
Date: 04/07/2004
Page: 1 of 1