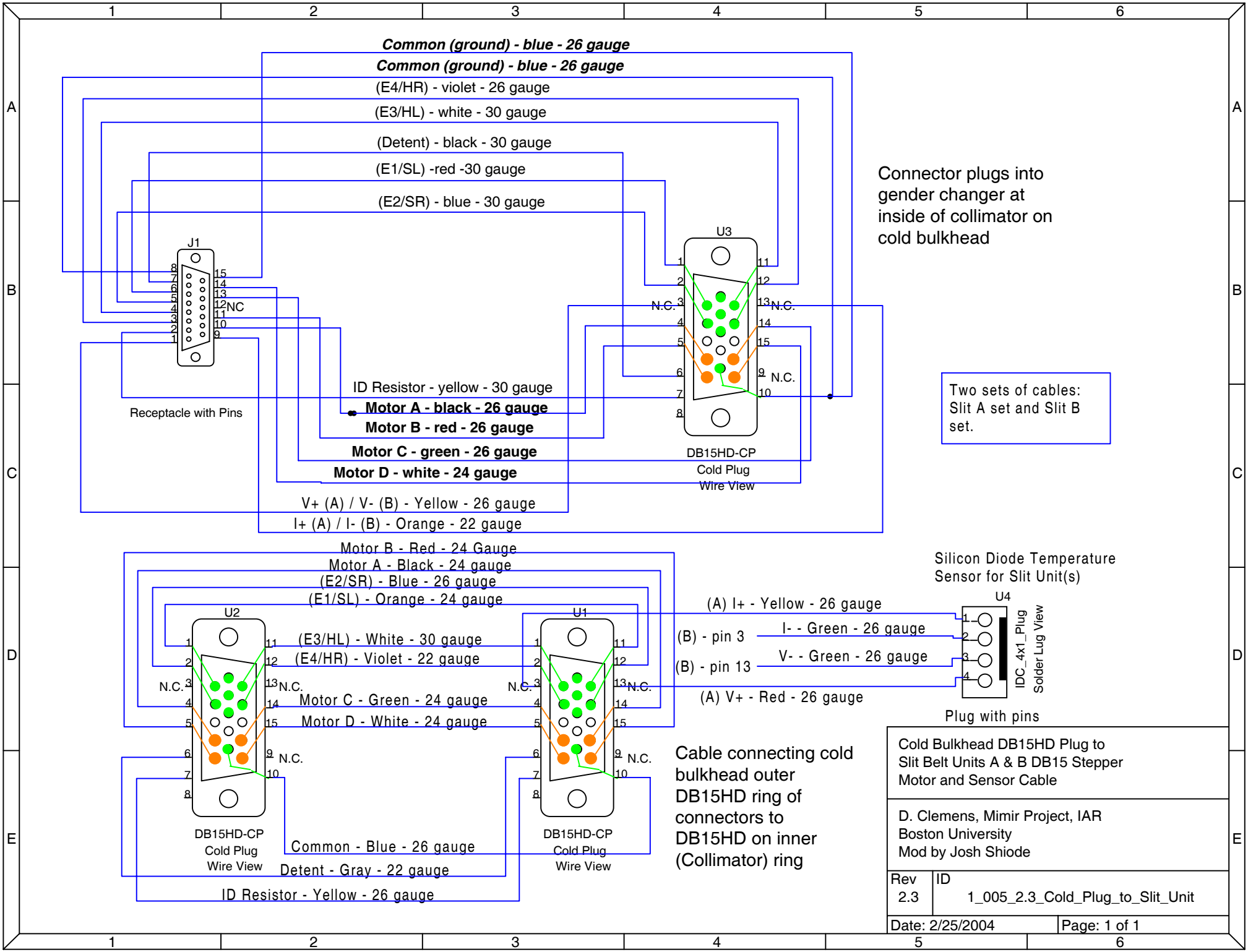
Common (ground) - blue - 26 gauge
Common (ground) - blue - 26 gauge
(E4/HR) - violet - 26 gauge
(E3/HL) - white - 30 gauge
(Detent) - black - 30 gauge
(E1/SL) -red -30 gauge
(E2/SR) - blue - 30 gauge
J1
NC
Receptacle with Pins
U3
N.C.
N.C.
N.C.
DB15HD-CP
Cold Plug
Wire View
Connector plugs into gender changer at inside of collimator on cold bulkhead
Two sets of cables: Slit A set and Slit B set.
ID Resistor - yellow - 30 gauge
Motor A - black - 26 gauge
Motor B - red - 26 gauge
Motor C - green - 26 gauge
Motor D - white - 24 gauge
V+ (A) / V- (B) - Yellow - 26 gauge
I+ (A) / I- (B) - Orange - 22 gauge
Motor B - Red - 24 Gauge
Motor A - Black - 24 gauge
(E2/SR) - Blue - 26 gauge
(E1/SL) - Orange - 24 gauge
U2
U1
(E3/HL) - White - 30 gauge
(E4/HR) - Violet - 22 gauge
Motor C - Green - 24 gauge
Motor D - White - 24 gauge
N.C.
N.C.
N.C.
N.C.
N.C.
N.C.
DB15HD-CP
Cold Plug
Wire View
DB15HD-CP
Cold Plug
Wire View
Common - Blue - 26 gauge
Detent - Gray - 22 gauge
ID Resistor - Yellow - 26 gauge
Silicon Diode Temperature Sensor for Slit Unit(s)
U4
(A) I+ - Yellow - 26 gauge
(B) - pin 3
I- - Green - 26 gauge
(B) - pin 13
V- - Green - 26 gauge
(A) V+ - Red - 26 gauge
IDC_4x1_Plug
Solder Lug View
Plug with pins
Cable connecting cold bulkhead outer DB15HD ring of connectors to DB15HD on inner (Collimator) ring
Cold Bulkhead DB15HD Plug to Slit Belt Units A & B DB15 Stepper Motor and Sensor Cable
D. Clemens, Mimir Project, IAR
Boston University
Mod by Josh Shiode
Rev 2.3
ID 1_005_2.3_Cold_Plug_to_Slit_Unit
Date: 2/25/2004
Page: 1 of 1